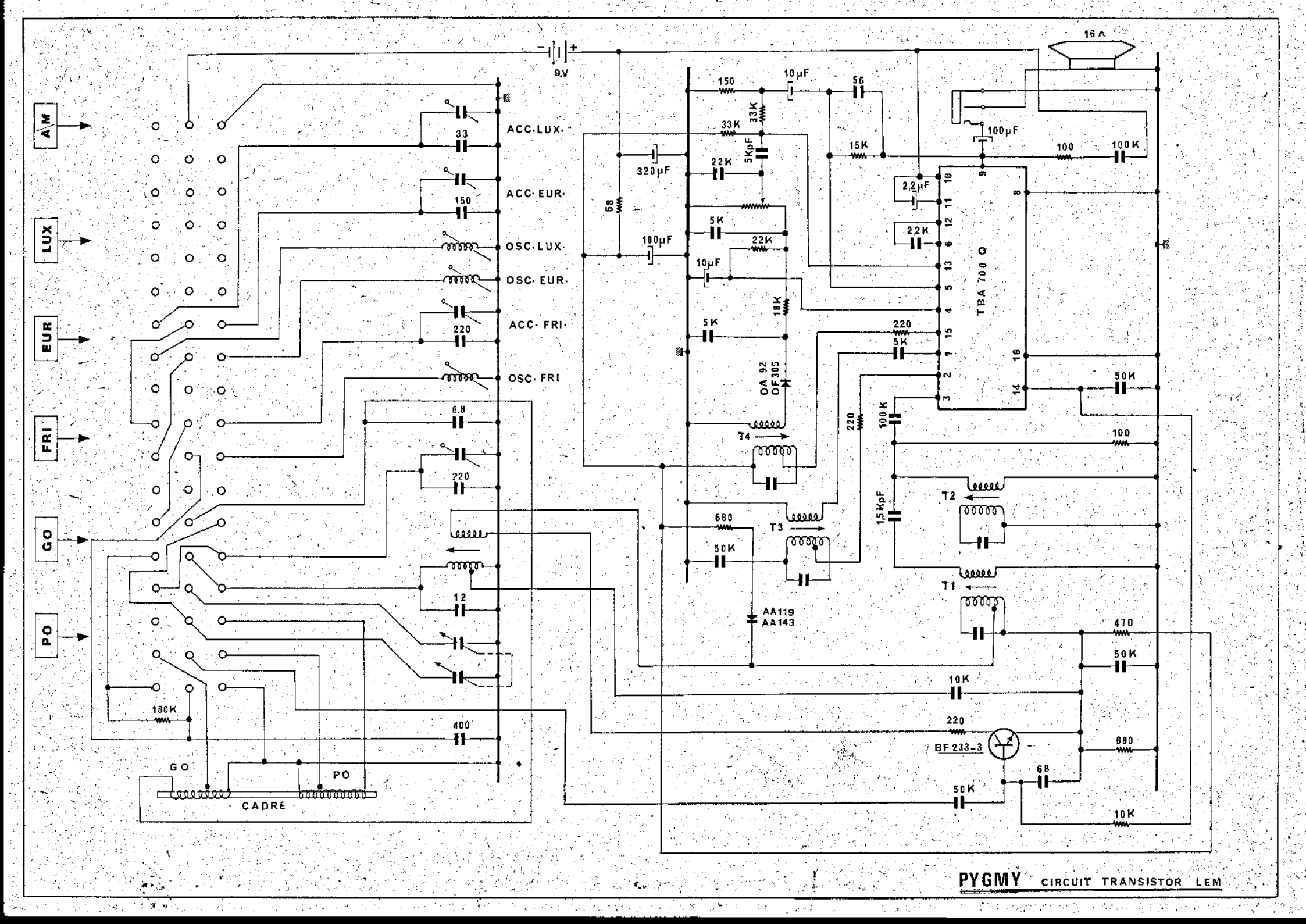


**PYGMY** CIRCUIT TRANSISTOR LEM